# Plastic Extruders Ltd

Russell Gardens, Wickford, Essex, SS11 8DN, England
Sales Tel: +44(0)1268 571116 Fax: +44(0)1268 560027
www.plastex.co.uk e-mail: sales@plastex.co.uk


THE SYMBOL OF EXCELLENCE

## PRODUCT DATA SHEET: Heronrib Matting

**Jan-12**

| Sizes & weights | | Length | Height | Widths | | | Weight |
|---|---|---|---|---|---|---|---|
| *All dimensions are nominal* | *Tolerances* | *0/+0.3* | *+/-0.5* | *+/- 1* | | | |
| | | m | mm | cm | | | kg/m$^2$ |
| | Heronrib | 10 | 10 | 50 | 100 | 122 | 5.5 |
| | | Roll weight (kg) | | 28 | 55 | 67 | |

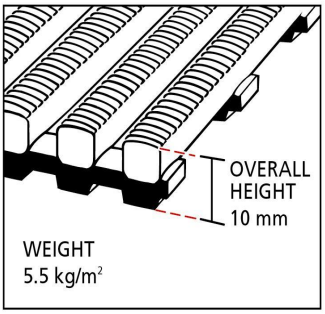

**General**

APPEARANCES **PVC Grid:** Open grid "duckboard" design with textured surface.

COLOURS All products available in homogeneous stable colours.
Heronrib colours = Oxford blue, Ocean blue, Charcoal grey, Forest green and Mulberry red.
All on black base bars. Other colours available on request.

DURABILITY **PVC Grid:** One piece welded construction for maintenance free life.

WORKABILITY Available in rolls for ease of installation.

USES All locations, both indoor and outside. Mulberry red colour is not colourfast in direct sunlight.

**Technical data**

ACOUSTIC **PVC Grid:** Excellent sound absorption properties.

CHEMICAL **PVC Grid:** Resistant to most acids, alkalines and oils (for specific chemical resistances, see http://www.plastexmatting.com/matfax/doc.php?doc_id=154&action=inline

COMPOSITION **PVC Grid:** Flexible (DINP plasticised) Polyvinyl Chloride.

FIRE **PVC Grid:** EN13501-1 : 2007 - Cfl 1 - S1

HYGIENE **PVC Grid:** Non-porous 100% Virgin PVC - Inhibits the growth of bacteria.
Anti-bacteria Sanitized additive; Test SN195 920 – Determination of the antibacterial effect against Staphylococcus aureus ATCC 6538. Result - Nil Growth,1mm halo, good effect.
Anti-fungal Sanitized additive; Test method ASTM G21-96; determining resistance to fungi. Result - Nil Growth after 4 weeks.

REVERSION **PVC Grid:** Thermoplastic shrinkage can result in size reductions up to 2%. Accelerated in hot environments (refer to July '97 Dimensional Stability of Heron Vinyl matting - Plastic Extruders Ltd).

SLIP RESISTANCE ASTM F 1677 (Dry/Wet): (0.6/0.54)
DIN51097: Classification C

THERMAL **PVC Grid:** Functional -23$^0$C +60$^0$C (slight size variation may occur at temperature extremes).

UV LIGHT **PVC Grid:** Resistant to PVC degradation (mulberry red colour is not colourfast in direct sunlight).

WARRANTY **PVC Grid:** 3 years. See www.plastexmatting.com/matfax/doc.php?doc_id=167&action=inline